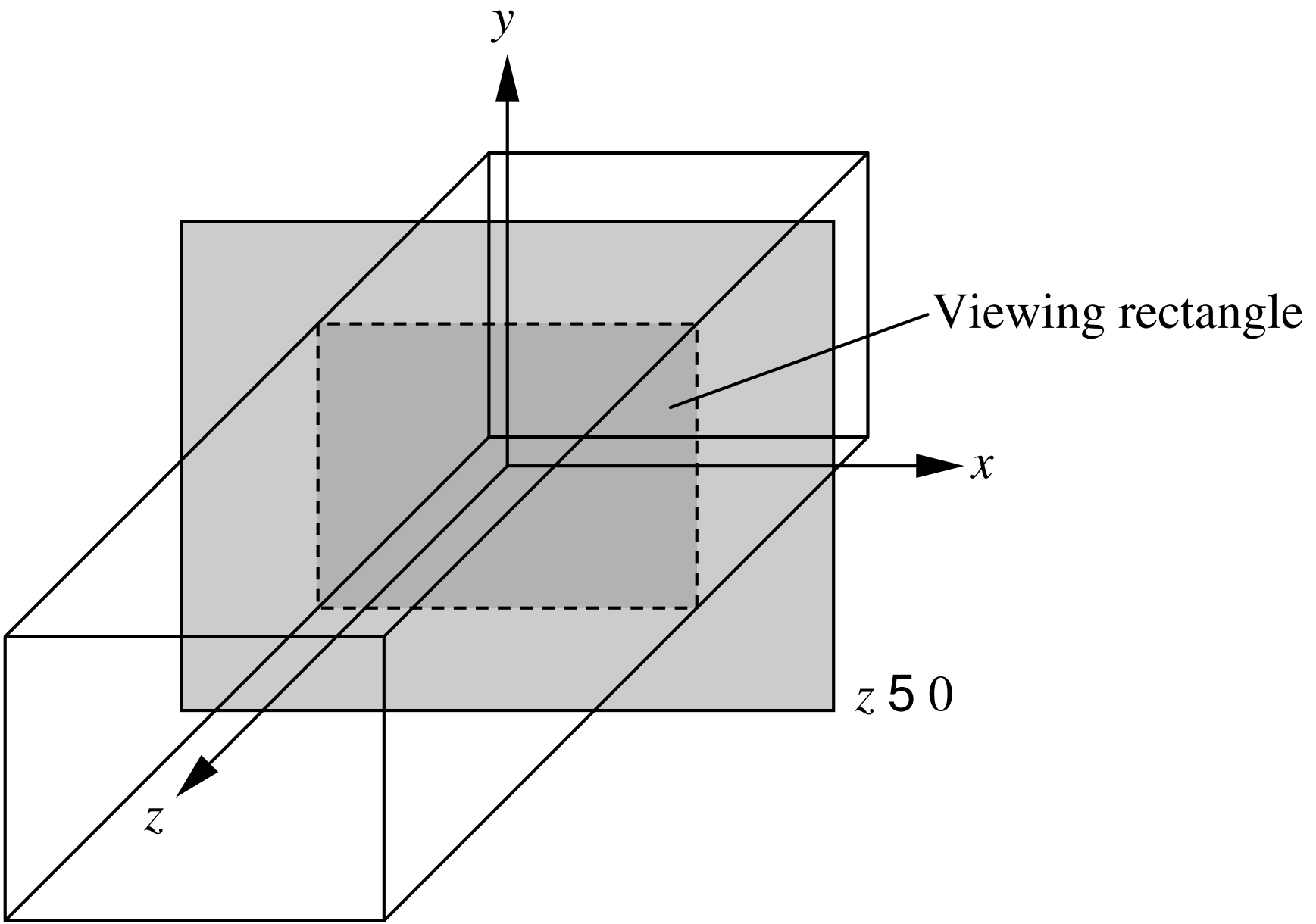
y
Viewing rectangle
x
z 5 0
z